How to install the grey pivot bearing on a wooden tiller.

- Drill a through hole ø12.5mm (1/2").
- Varnish the hole
- Insert the grey socket.
- Secure with the 2 x N°8 screws, (supplied).

How to install the grey pivot bearing on a metal or composite tiller.

- Drill a through hole ø12.5mm (1/2").
- From underside of tiller drill hole Ø16.5mm (21/32"), do not drill through top skin / top wall.
- Insert the grey backing spacer tube (E-Sleeve) this is required to support pivot bearing.
- If the tiller is in composite, protect the hole using gel-coat to avoid water penetration in fibres.
- Around the tube, the top external surface must be flush with the tiller.
- Insert the grey pivot bearing.
- Fix it with 2 x countersunk bolts M5 and M5 Nyloc nuts (supplied).

Maintenance

Spinlock products are made from the best quality materials for durability and low maintenance in a harsh marine environment.

For reliable operation, flush your tiller extension regularly with FRESH water to remove salt.

Do not lubricate locking mechanism. Mineral oil & solvent based lubricants like "WD40" will accelerate the ageing of plastic components and attracts debris into ball lock mechanism.

Never sail with a damaged or bent tiller extension.

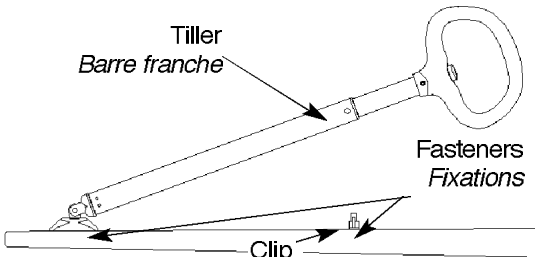

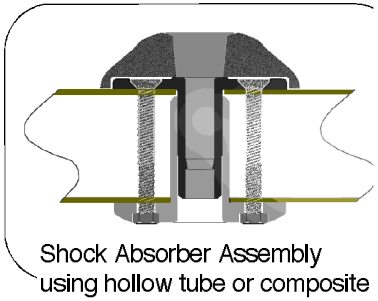

Shock Absorber Assembly using hollow tube or composite tiller.

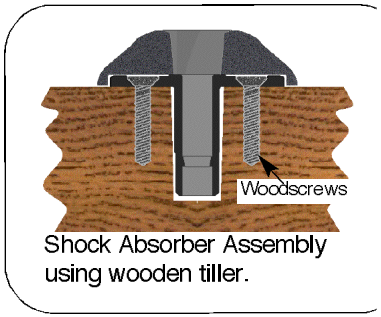

Shock Absorber Assembly using wooden tiller.

E-FASTPIN ... Full Swivel Joint Release Pin
E-SHOCK ... Shock Absorber
E-CLIP ... Tiller Clip
E-BUTTON ... Control Button
E-TUBE ... Insert for hollow / composite tille
E-GRIP ... Tube Sleeve Grip
E-JOINT ... Full Swivel Joint with Fastpin
E-SLEEVE ... Full Length Sleeve
E-DIAGPLO ... Full Universal Joint

spinlock accessories

customer service

Spinlock's after sales service is available worldwide through our distribution network. Should you need any help in obtaining spare parts, or advice with repairs, your local Spinlock expert can provide a fast and professional service.

Spinlock world service

AUSTRIA
Baier Reich GmbH
T: +49 8936 5075

BENELUX
Micre Marine bv
T: +31 172 506 820

DENMARK
Columbus Marine A/S
T: +45 46 1911 66

FINLAND
Oy Vestbel AB
T: +358 9 887 0120

FRANCE
Intrepist
T: +33 2 99 19 54 54

GERMANY
Baier Reich GmbH
T: +49 8936 5075

GIBRALTAR
H. Sheppard & Co Ltd
T: +350 75148

GREECE
Rangi SA
T: +30 1412 5069

HUNGARY
Fannon Yacht-Skipper Co Ltd
T: +361 466 8320

ITALY
Deal Marine SRL
T: +39 02 569 5906

MALTA
RLR
T: +356 335 591

NORWAY
Ingvald Sivane A/S
T: +47 33 041 591

POLAND
Ma-Jet-RL Ltd
T: +48 22 869 986

PORTUGAL
Sailing Box – Comercio de Artigos Náuticos, Lda
T: +351 226 179 986

SLOVENIA
Seaway d.o.o.
T: +386 43 502 444

SPAIN
Equipyacht s.l.
T: +34 98 221 9219

SWEDEN
Sportsmanship AB
T: +46 31 939 400

SWITZERLAND
Ruhl & Co. AG
T: +41 44 932 2000

TURKEY
Turcan A.S.
T: +90 212 696 99 15

UNITED KINGDOM
Marshall Leisure Ltd
T: +44 2392 637711

CANADA
Transat Marine Ltd
T: +1 709 721 0149

USA
Marinne Supply LLC
T: +1 860 767 0488

ARGENTINA
Inner S.A.
T: +5411 4580 0444

BRAZIL
Regatta Sport Ltd
T: +55 11 3080 3400

AUSTRALIA
Spinlock Australia Pty Ltd
T: +612 9905 5400

BRITISH VIRGIN ISLANDS
Rigging Services
T: +284 494 2739

HONG KONG
Sky International
T: +852 2837 5876

NEW CALEDONIA
Marine Corail Nouméa
T: +687 27 58 48

NEW ZEALAND
Power & Marine Ltd
T: +6499 145 555

SOUTH AFRICA
Central Boating (Pty) Ltd
T: +27 21 424 8026

spare parts and accessories for tiller extensions Stick E/ series

3R221A General & Spares Instruction

The experts in roperholding